Recommendations for placement of IAQ sensors

Suitable conditions

- In areas that are most meaningful in terms of indoor air quality
- At a height of about 1.0 to 2.0 meters at ground level on the interior walls
- At least 1 m from the corner
- At least 0.5-1 m from the door
- At least about 1 m from the corner
- In places where the temperature is in the range of about 10-40 ° C
- Close (not very close - about 0,5 m and more) the air exhaust from the room

Conditions to avoid

- Near windows
- Near the door
- Outside (perimeter) walls
- In areas with limited air circulation such as a vestibule, niches, etc.
- In places subject to sudden changes of temperature
- In areas with steep changes of humidity
- In places where come about condensation of humidity
- In places where people breathe directly on the sensor
- In areas where can be occurred vapours from a variety of chemicals such as detergents, etc.
- In areas where risk of splashing sensor by different liquids

Examples of wiring diagram

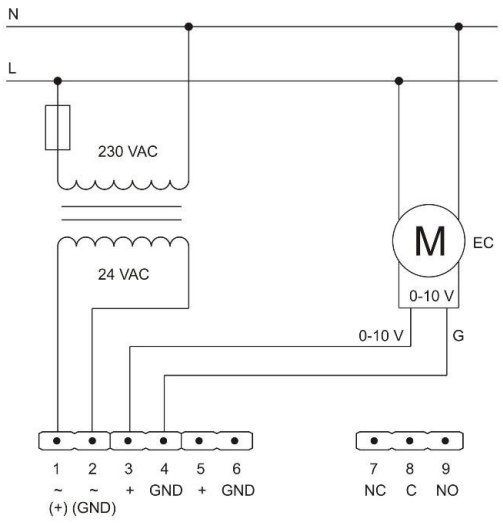

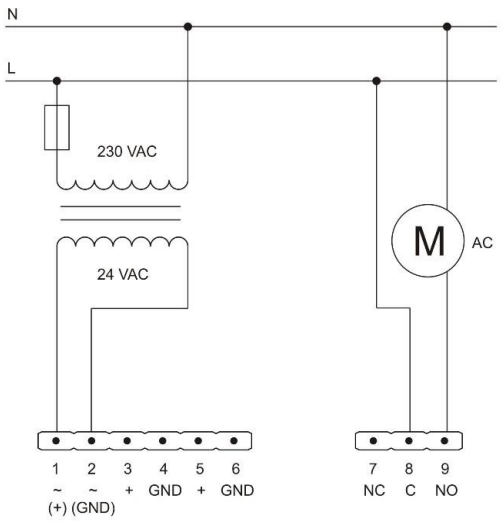
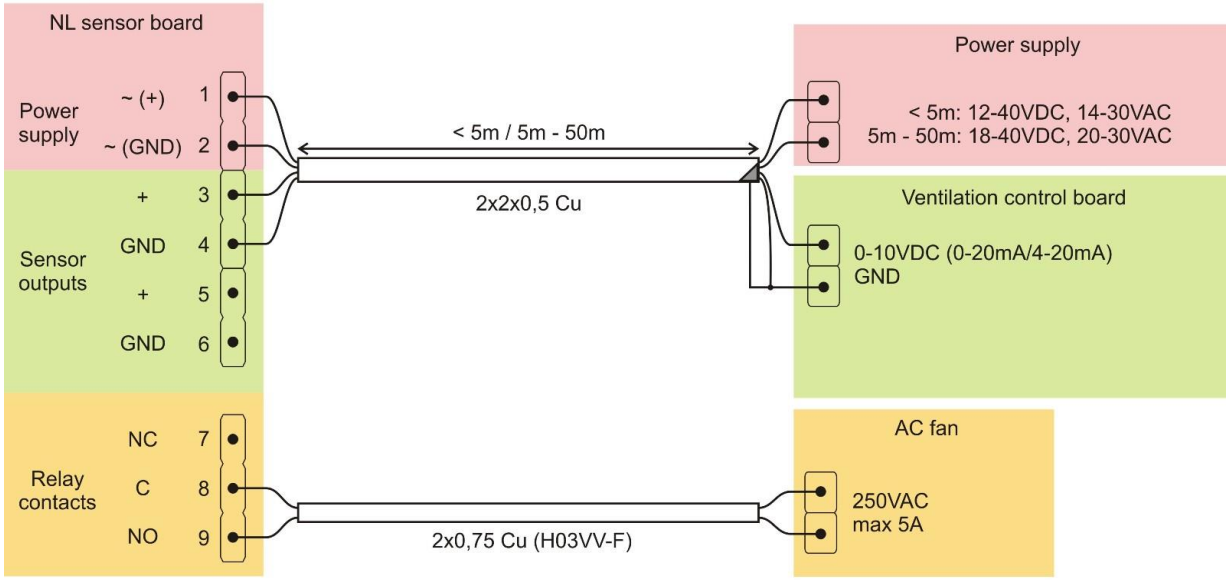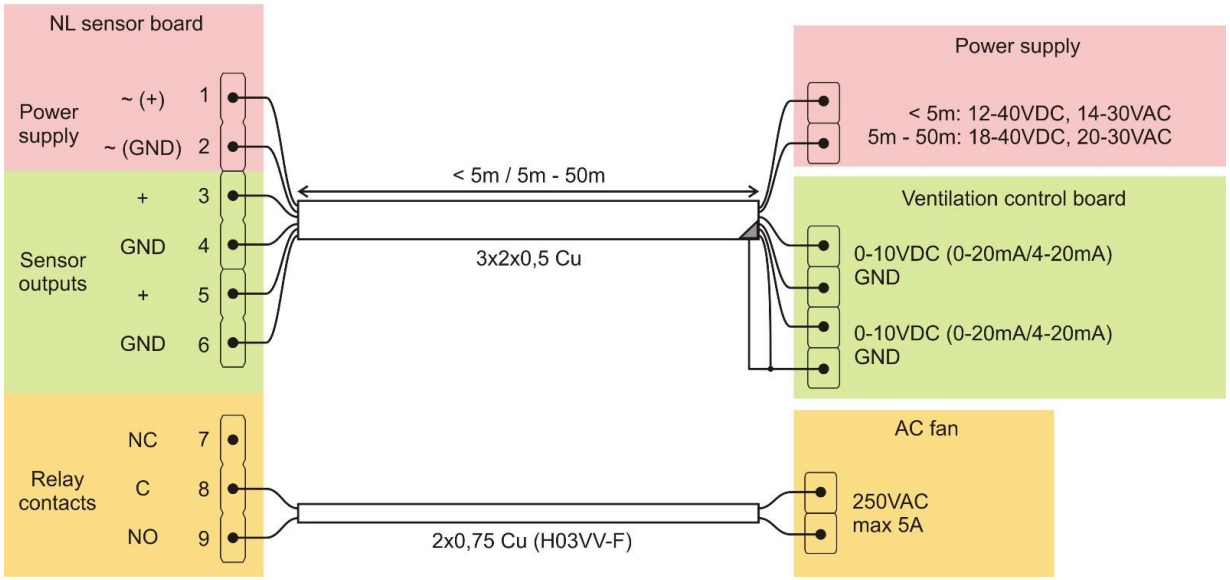
Recommend wiring